Operation, maintenance and installation manual

COOL4U AUTOMOTIVE KFT.
1097 Budapest, Illatos út 7/a
+36 1 422 1818 | fax +36 1 357 6390
mail@cool4u.hu
www.autoklima-webshop.hu

CAUTION

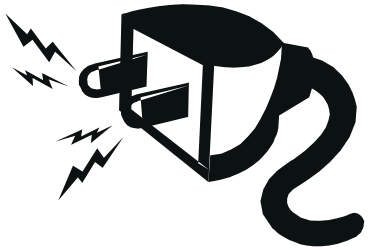

For safe operation, this unit must:

1.This appliance can be used by children aged from 8 years and above and persons with reduced physical, sensory or mental capabilities or lack of experience and knowledge if they have been given supervision or instruction concerning use of the appliance in a safe way and understand the hazards involved. Children shall not play with the appliance. Cleaning and user maintenance shall not be made by children without supervision.
2. If the supply cord is damaged, it must be replaced by the manufacturer, its service agent or similarly qualified persons in order to avoid a hazard.
3. The appliance have full disconnection switch in the fixed wiring in accordance with the wiring rules.

Failure to do so can result in property damage, personal injury and /or death.

Table of Contents

Instructions handbook for operation, maintenance and installation
Heat pump

1 General information

1.1. Scope of the manual....2
1.2. Manufacturer and machine identification....2
1.3. Machine description....2
1.4. User tips....4
1.5. Description of controls....4
1.6. Installing and changing batteries....9
1.7. Description of the receiver....9
1.8. Technical data....10
1.9. Routine maintenance....11

2 Information on installation

2.1. Packing, unpacking and handing....12
2.2. Choice of the place of installation....13
2.3. Preparing the opening and fixing....14
2.3.1. Fixing systems....15
2.4. Fitting the infrared receiver....18
2.5. Compartment opening and electrical hook-up....19
2.6. Air ducting....20

3 Troubleshooting, maintenance, recycling

3.1. Trouble, causes, remedies....21
3.2. Special maintenance....21
3.3. Decommissioning and recycling....21

Wiring diagram 30UB 22
Spare parts catalogue talbe 30UB 23

1 General information

1.1. Scope of the manual

This manual has been drawn up by the Manufacturer and is an integral part of the machine.
The information it contains, if observed, can guarantee correct use of the machine.
The first part of the manual is for the user , while the second part is for the expert personnel who install the machine.

To highlight some parts of the text, the following symbols have been added:

This operation may be a source of danger.
Useful advice.
Information on being environment friendly.

1.2. Manufacturer and machine identification

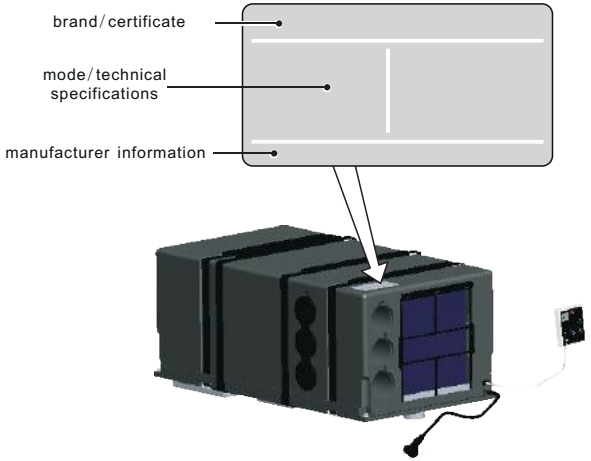

1.3. Machine description

This machine has been designed and built to be installed on vehicles (motor homes, caravans, special vehicles, etc.) in order to improve the internal temperature. When the weather is hot it supplies cool and dehumidified air; when the weather is cold it supplies hot air without however replacing the vehicle's original heating system. In both cases the air temperature is adjustable.

Cool air - Description of operation (FIG. 5)
The system is composed of: compressor (A), condenser (B), evaporator (D) a 4-way valve (F) and the pressurized refrigerant.
The refrigerant, by changing physical state from liquid to gas, heats or cools the components through which it passes.
The evaporator that has been made cold is crossed by the internal air blown by the fan blower(C).
It comes out cooled and dehumidified. This action protracted over time creates a reduction in the temperature inside the vehicle.

Hot air - Description of operation (FIG. 5)
The refrigerating cycle is reversed by the 4-way valve switching over (F); the internal coil changes from evaporator to condenser, thereby heating the air passing through it.
The system is equipped with a heating element (E) that increases the efficiency of the heat pump at low temperatures.

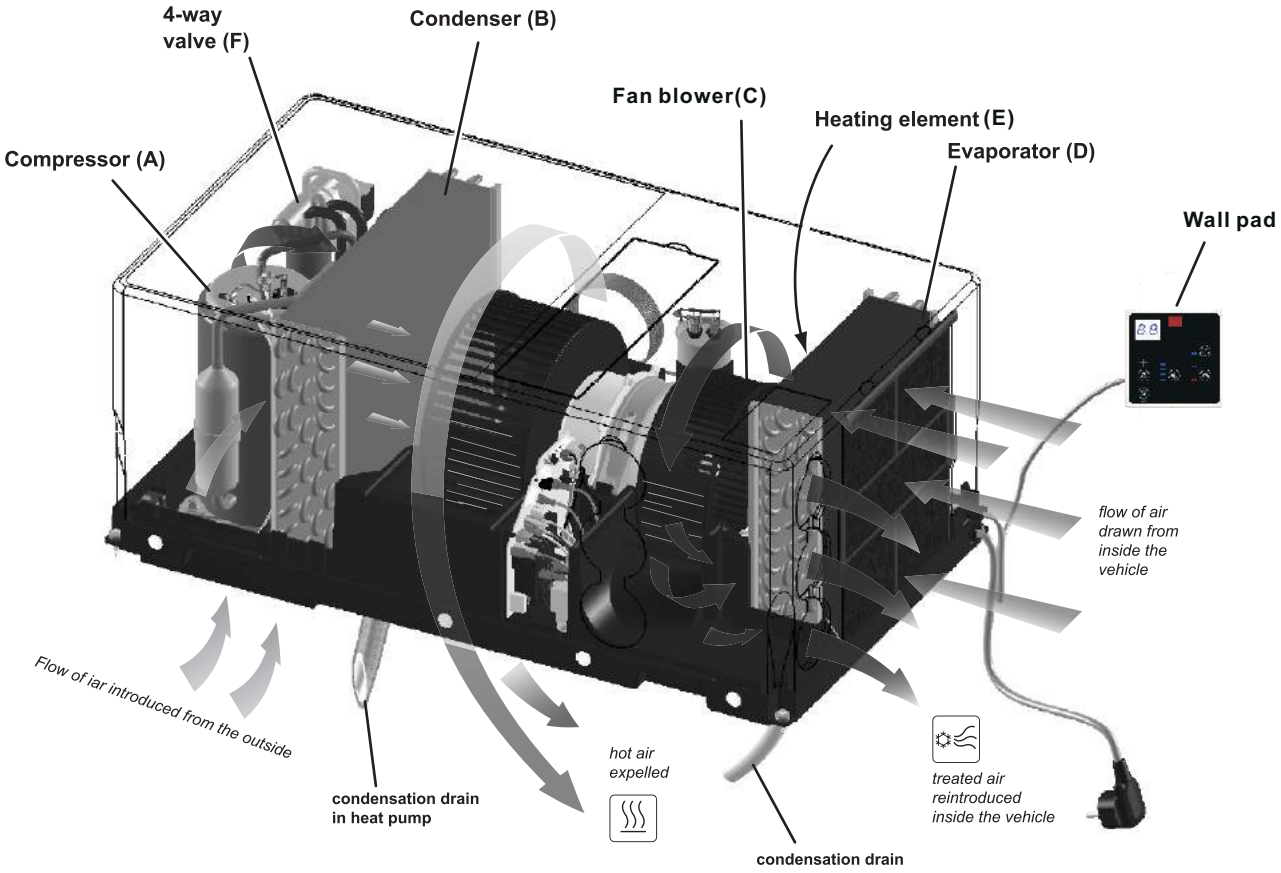
4-way
valve (F)
Condenser (B)
Fan blower(C)
Heating element (E)
Evaporator (D)
Compressor (A)
Wall pad
flow of air
drawn from
inside the
vehicle
Flow of iar introduced from the outside
condensation drain
in heat pump
hot air
expelled
treated air
reintroduced
inside the vehicle
condensation drain

1.4. User tips

The machine performance can be improved by taking some precautions.

- Improve the vehicle's heat insulation by eliminating openings and covering the glass surface with reflecting curtains.
- Avoid frequently opening doors and windows when not necessary.
- Select the appropriate temperature and fan speed. Direct the air vents suitably.
- In order to avoid machine malfunctioning and risks of injury, take the following precautions:
- Do not obstruct the ventilation air inlet and outlet with cloth, paper or any other items;
- do not put your hands or any other items into the openings;
- do not spray water inside the machine;
- keep flammable substances well away from the machine.
- Clean the air filter periodically.

1.5.Description of the controls

Selecting functional status

At the time of **switching on, the system waits for a few minutes before operating the compressor**.

Press the "**MODE**" button to move between the possible states (automatic, cold, dehumidification, ventilation, heat pump) and wait two seconds on the selected state for this to be confirmed by the system with an audible warning (the buzzer is inside the machine). Always point the remote control towards the wall pad to send all the signals.

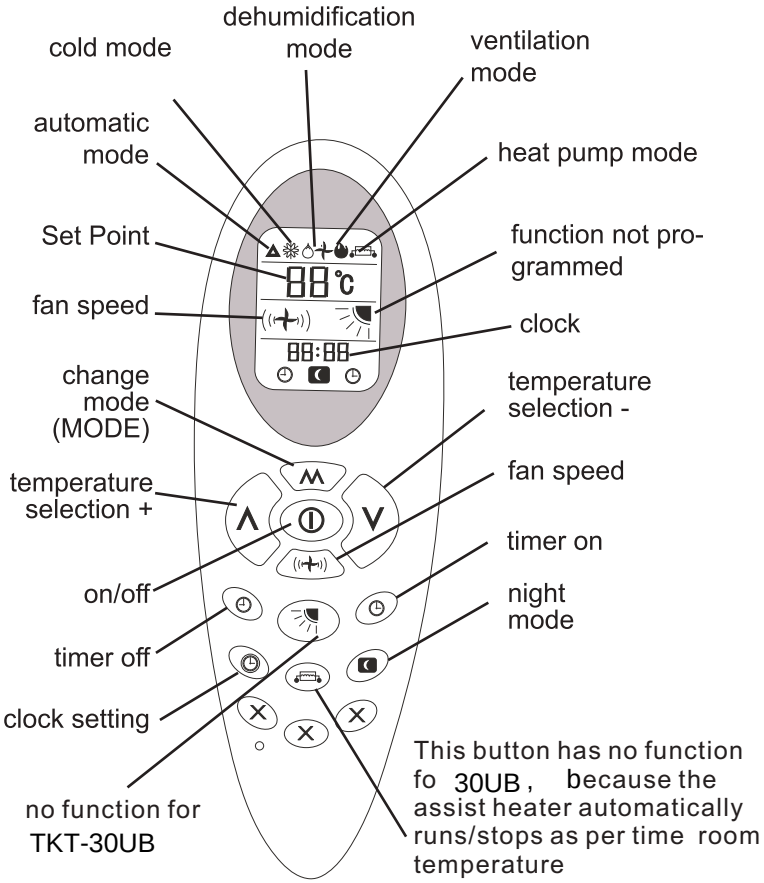

X= no function

Automatic mode

1		Press the on/off button to switch on the machine.
2		Press the change mode button to select automatic mode[1].
3		The temperature selection buttons are disabled.
4		Press the fan speed button to select low, medium or high speed or automatic speed[2].
5		Press the on/off button to switch off the machine. This mode stays in memory for switching on the next time.

note[1]: In this mode the machine manages the compressor, heat pump and fan speed entirely automatically by comparing the set temperature with the internal temperature according to table A.

note[2]: on automatic speed the correct ventilation is set according to the difference in temperature between the set point and the ambient temperature.

TABLE A

Internal temperature	T≤20°C	20°C<T<25°C	T≥25°C
Operating mode	Heat pump o ventilation	Dehumidification o ventilation	Cold
Set point	20°C	22°C	25°C

Cold mode

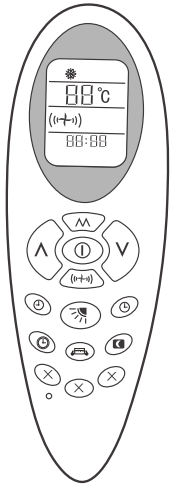

1		Press the on/off button to switch on the machine.
2		Press the change mode button to select cold mode.
3		Press the selection buttons to set the ambient temperature on the desired value between 18°C and 30°C.
4		Press the fan speed button to select low, medium or high speed or automatic speed[2].
5		Press the on/off button to switch off the machine. This mode stays in memory for switching on the next time.

Dehumidification mode

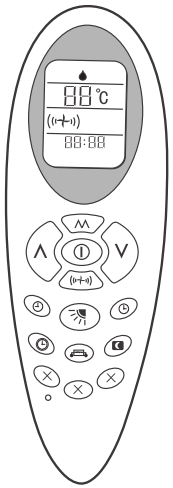

1		Press the on/off button to switch on the machine.
2		Press the change mode button to select dehumidification mode.
3		Press the selection buttons to set the ambient temperature on the desired value between 18°C and 30°C.
4		The fan speed selection button is disabled.
5		Press the on/off button to switch off the machine. This mode stays in memory for switching on the next time.

Ventilation mode

1		Press the on/off button to switch on the machine.
2		Press the change mode button to select ventilation mode.
3		Press the selection buttons to set the ambient temperature on the desired value between 18°C and 30°C.
4		Press the fan speed button to select low, medium or high speed or automatic speed[2].
5		Press the on/off button to switch off the machine. This mode stays in memory for switching on the next time.

Heat pump mode

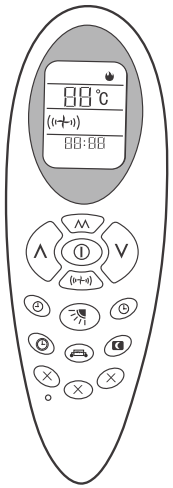

1		Press the on/off button to switch on the machine.
2		Press the change mode button to select heat pump mode.
3		Press the selection buttons to set the ambient temperature on the desired value between 18°C and 30°C.
4		Press the fan speed button to select low, medium or high speed or automatic speed[2].
5		Press the on/off button to switch off the machine. This mode stays in memory for switching on the next time.

Night mode

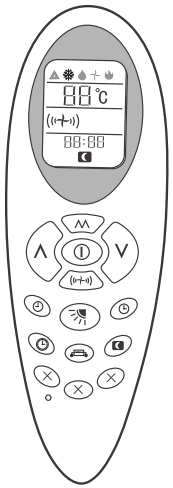

1		Press the on/off button to switch on the machine.
2		Press the change mode button to select the desired mode from all the ones available.
3		Press the night mode button to turn this function on and off.
4		Press the selection buttons to set the ambient temperature on the desired value between 18°C and 30°C.
5		This mode sets the ventilation on low speed therefore it is not possible to switch onto the other available options.
6		Press the on/off button to switch off the machine. This mode stays in memory for switching on the next time.

Timer off mode

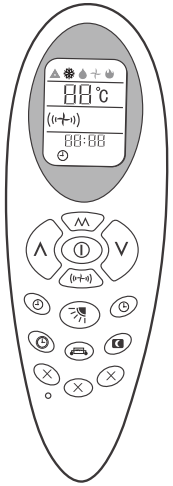

1	Press the on/off button to switch on the machine.
2	Press the change mode button to select the desired mode from all the ones available.
3	Press the selection buttons to set the ambient temperature on the desired value between 18°C and 30°C.
4	Press the fan speed button to select low, medium or high speed or automatic speed[2].
5	Press the timer off button to set the time when the machine must switch off[3].
6	Press the selection buttons to change the time when the machine must switch off.
7	Press the timer off button to confirm the data entered.
8	Pressing the timer off button a third time si disables this function.

Timer on mode

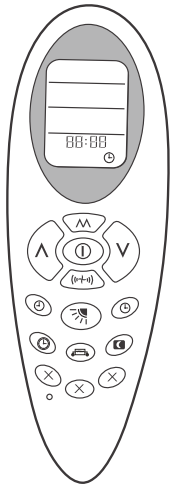

1	The machine must be off.
2	Press the timer on button to set the time when the machine must switch on[4].
3	Press the selection buttons to change the time when the machine must switch on.
4	Press the timer on button to confirm the data entered[5].
5	Pressing the timer on button a third time disables this function.

note[3]: When you press the button the first time the symbol on the display flashes to signal you are programming a switch-off; pressing it a second time saves the data and the icon stays on steady to signal activation of the timer off function ; pressing it a third time turns off the timer off mode.

note[4]: When you press the button the first time the symbol on the display flashes to signal you are programming a switch-on; pressing it a second time saves the data and the icon stays on steady to signal activation of the timer on function ; pressing it a third time turns off the timer on mode.

note[5]: At the set time the machine will start in automatic mode.

1.6. Installing and changing the remote control batteries

Take off the battery cover.
Insert the two batteries supplied (size AAA), paying attention to their polarity.
Fit the battery cover back on.
Check the remote control works properly by pressing the on button: if, on pressing the button, no icon appears on the display then you need to re-install the batteries checking their polarity. The machine is connected to the power supply and ready for use.

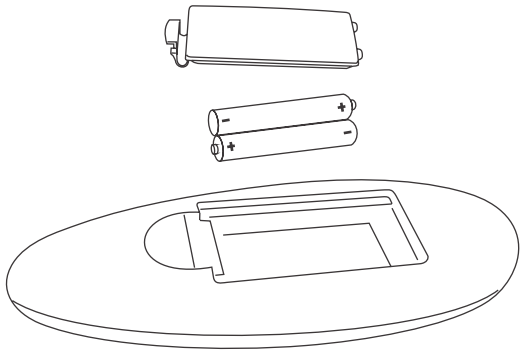

1.7. Description of the wall pad

1. Signal receiver
2. Press the ON/OFF button to switch ON or OFFthe air conditioner, it will run in memory mode.
3. Press the MODE button to select cooling or heating mode.
4. Press the FAN button to select fan speed.
5. Press the UP or DOWN button to select the desired temperature.

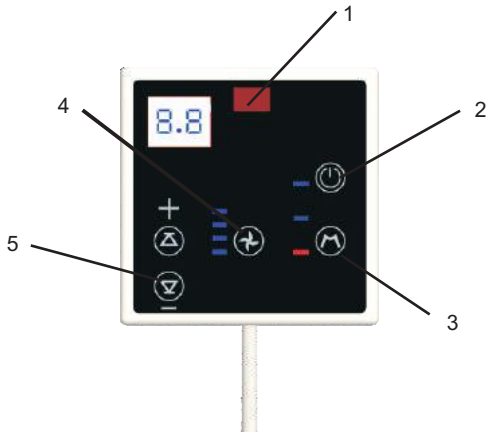

wall pad

1.8. Technical data

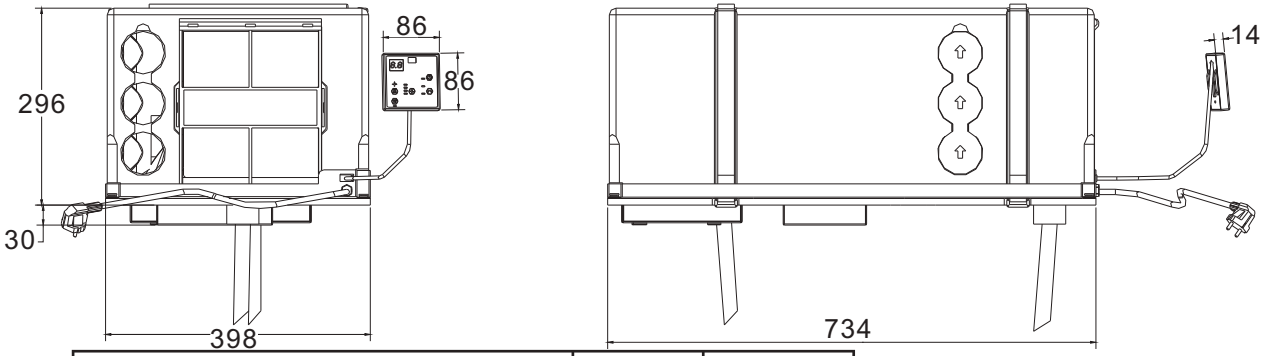

Description	Unit of measurement	Model HB 9000	
Refrigerant type/quantity	see machine dataplate		with no CFCs
Refrigerating capacity	Btu/h	9000	
Heating capacity	Btu/h	9000+500W	
Consumption when cooling	A-Watt	4.2 - 925	
Consumption when heating	A-Watt	5.3 - 1250	1250W(750W+500W)
Breakaway current	A	20 (150ms)	
Additional heating element	Watt	500	* Additional heating element
Electricity supply	V-Hz	230- 50	
Protection class	IP	X5	
Treated volume of air (max)	m^3/h	350	
Max volume (recommended with insulated walls)	m^3	30	
Weight	kg	27.8	
E.E.R.	-	2.5	
C.O.P.	-	2.6	
Ventilation	Speed no.	3	
Operating temperature	°C	from -15 to +40	** according to EN 14511

1.9. Routine maintenance

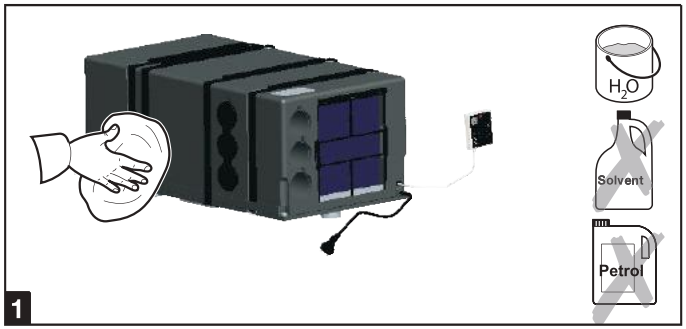

Cleaning; do it periodically, removing the dust with a moist cloth. If necessary, use a non-aggressive detergent. Never use petrol or solvents.

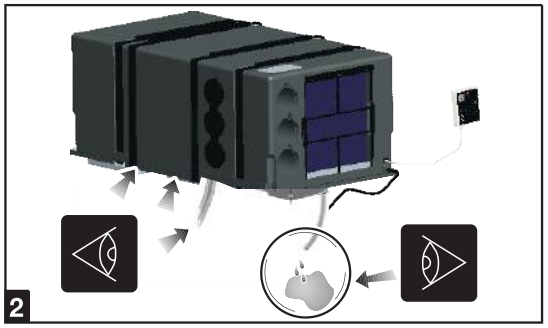

Checking: Do it periodically, making sure that:
- the condensation drain holes are not obstructed.
- the openings in the floor are not obstructed.

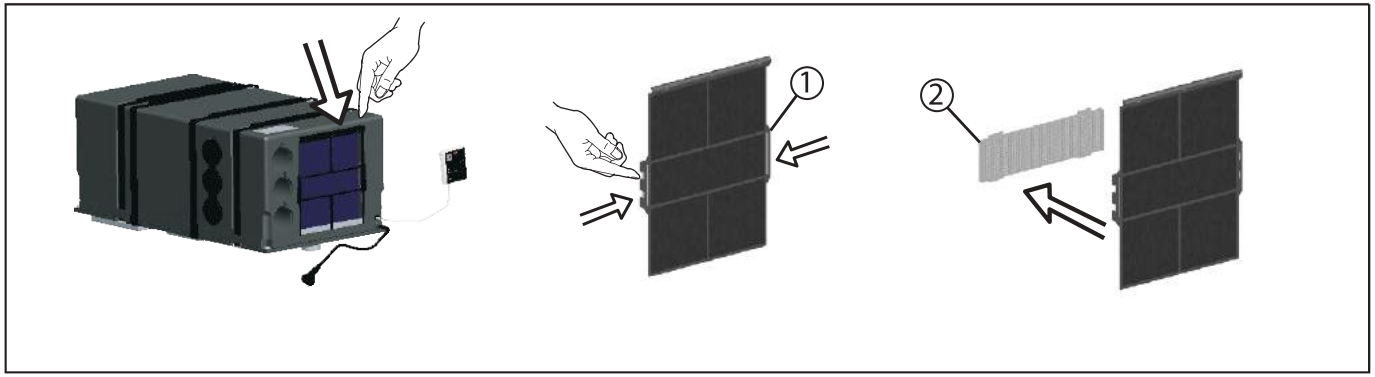

Filters cleaning (1): periodically carry out this operation; wash the filters (N.1) with a detergent solution and allow to dry before refitting.
Active Carbon filter (2) (optional): It's recomended to change the active carbon filters (N.2) every year.

Installation can be performed by persons with specific technical knowledge. In addition to this requirement, installers must have adequate working conditions in order to ensure their own safety and that of others.

2.1. Packing, unpacking and handling

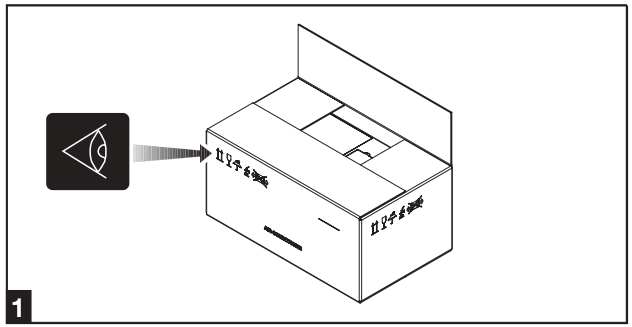

Observe the instructions given on the packing.

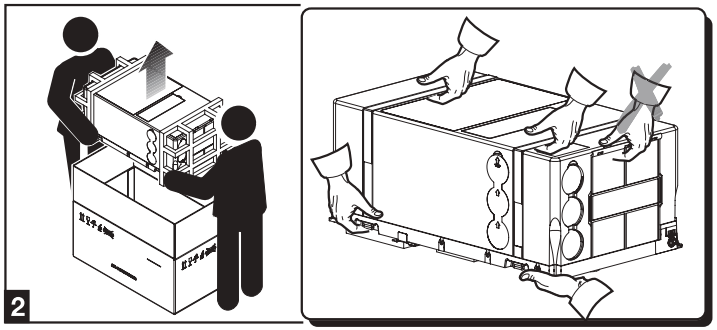

Lift the machine, checking it is sound.
Lift it using the handles or the belts on the base.

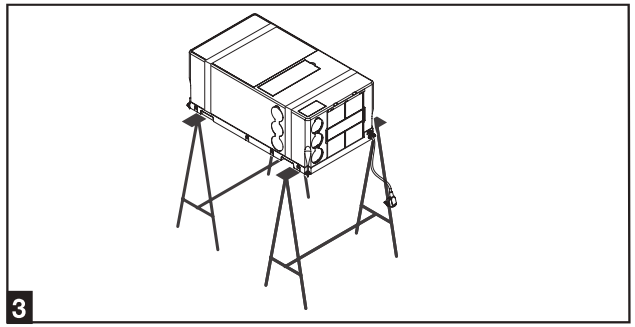

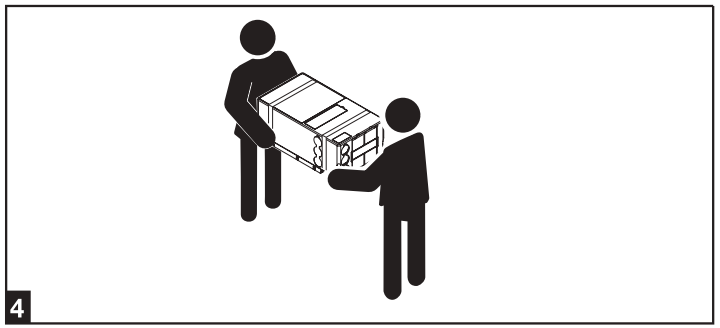

Transfer the machine to the place of installation in conditions of safety.

2.2. Choice of the place of installation

To accomplish uniform climate control in a vehicle, the machine must be installed as near the middle as possible, in a housing or a similar device.

Position the machine so as to ensure easy access for servicing and to facilitate disassembly and installation.

Place the assembly template in the compartment intended for installation and check the space available for the openings in the floor.

To minimize the transmission of noise and vibration during operation, the machine must have a minimum clearance on each side of 30 mm from the walls and fittings,

The machine must be installed on the floor.

To make renewing the filter easier, keep a distance of 200 mm between the front of the machine and the walls of the compartment.

If fitting in external compartments (e.g., false bottoms), the air to be treated must be drawn in from the vehicle's passenger compartment.

Drawing in outside air can significantly reduce the power of the system.

2.3. Preparing the opening and fixing

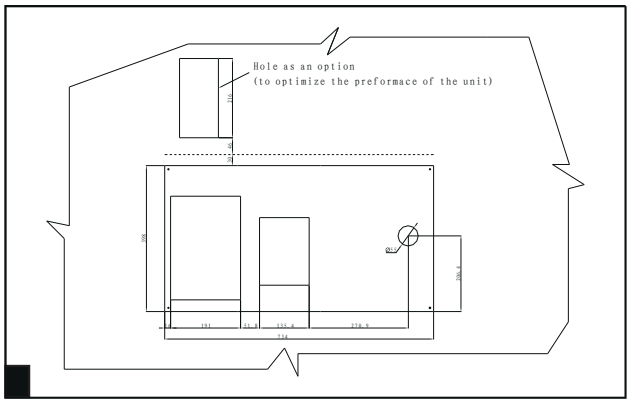

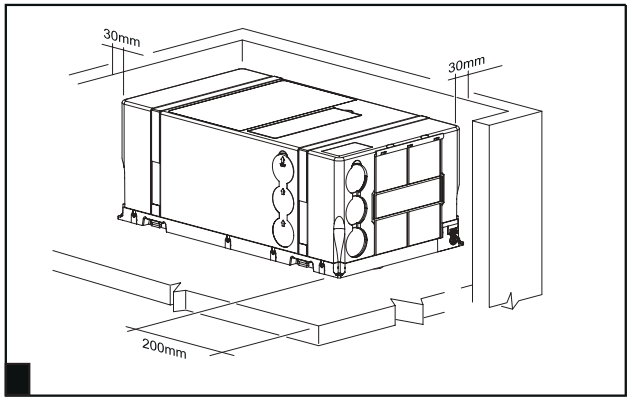

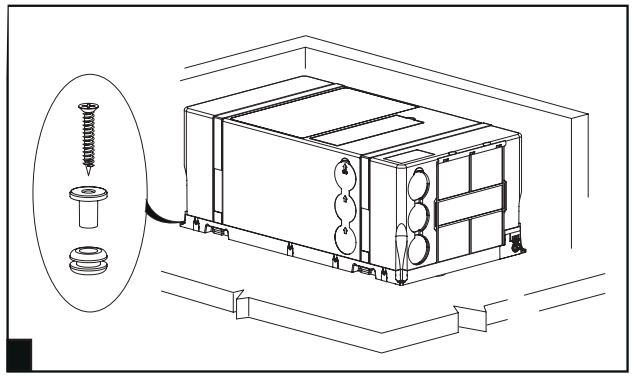

To install the machine it is necessary to create openings in the floor.
The openings in the floor of the vehicle must be accessible and, therefore, must not be covered by parts of the chassis frame behind or the like.
These openings must not be reached by splashes from the wheels; fit a splash guard or something similar if necessary.
Take care to leave a gap of at least 30mm between the machine and the adjacent walls. Secure the machine to the floor using the kit provided.

▲The machine must preferably be installed level. Maximum angle 10° to prevent condensation coming out.
Before making the holes, always check there are no cables, gas pipes, parts of the chassis frame or the like underneath or hidden. Seal the machined surfaces of the openings in the floor with water-repellent products.

2.3.1 Fixing systems

Parts supplied for the a/c fixing

x8

x4

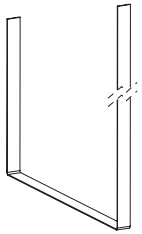

x2

x4

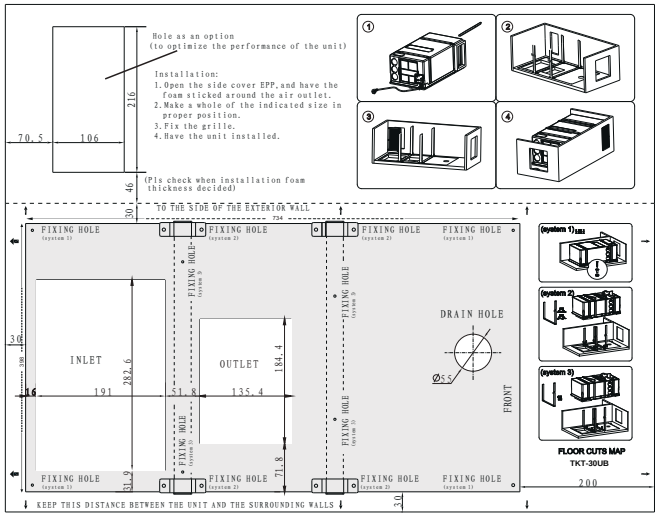

x1

Mode 1: use n° 4 screws for the a/c fixing

x4

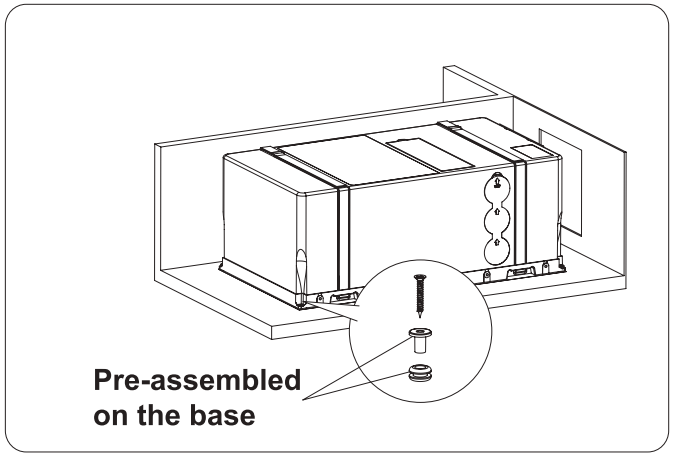

Mode 2: use n° 8 screws, n° 4 brackets and n° 2 belts for the a/c fixing

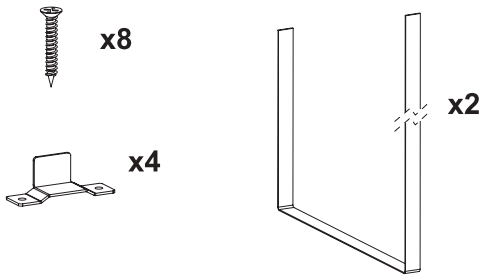

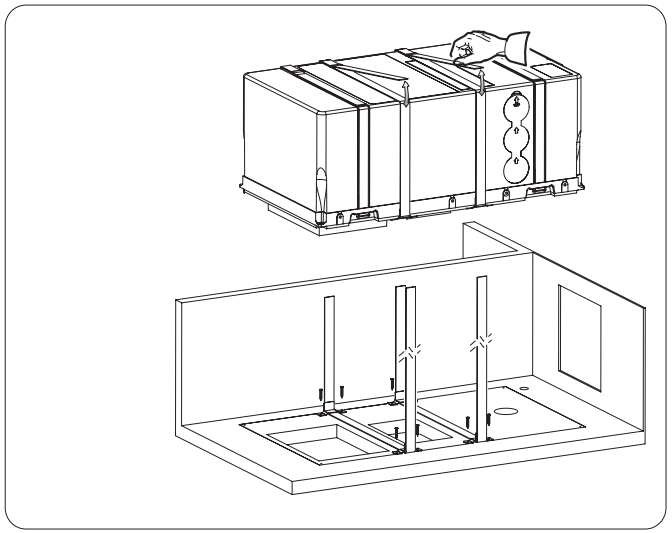

Mode 3: use n° 4 screws and n° 4 washers for the a/c fixing

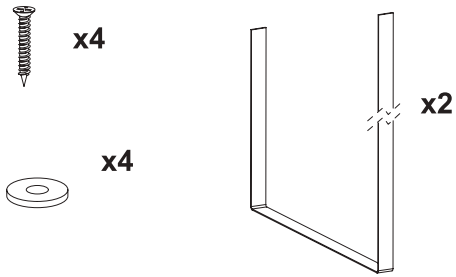

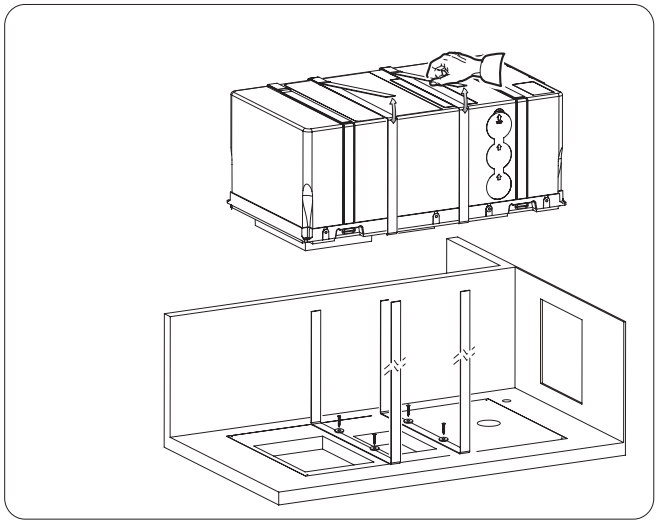

Hole as an option
(to optimize the performance of the unit)

Installation:

1. Open the side cover EPP,and have the foam sticked around the air inlet.
2. Make a whole of the indicated size in proper position.
3. Fix the grille.
4. Have the unit installed.

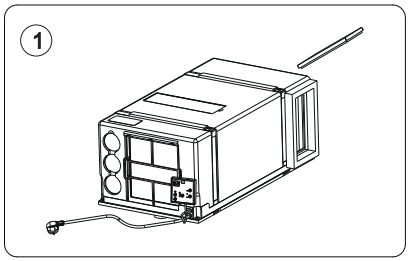

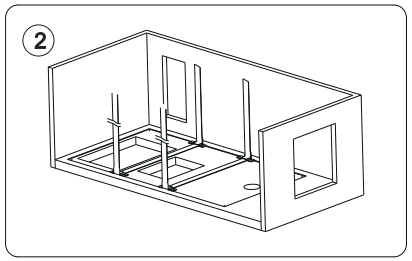

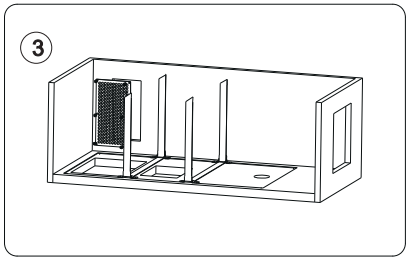

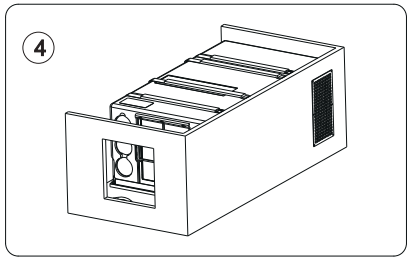

2.4. Fitting the infrared wall pad

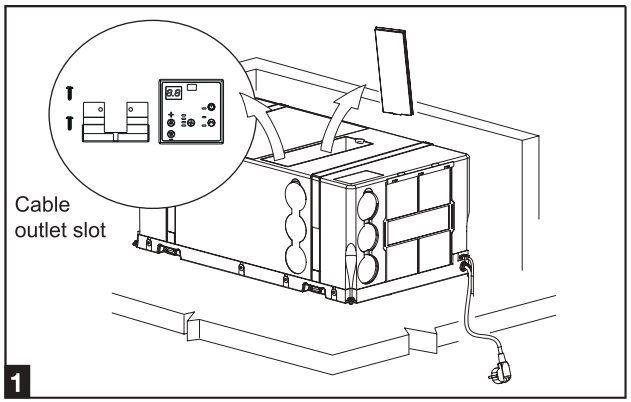

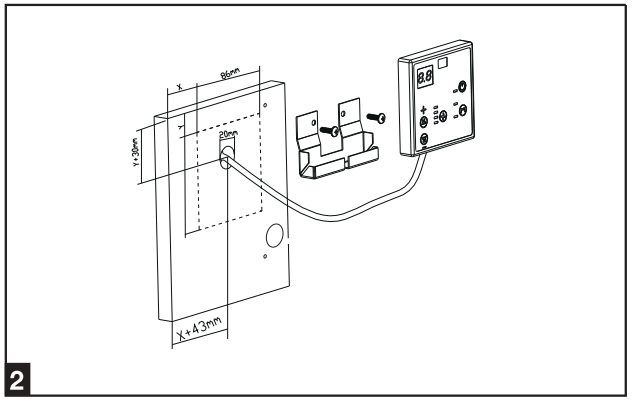

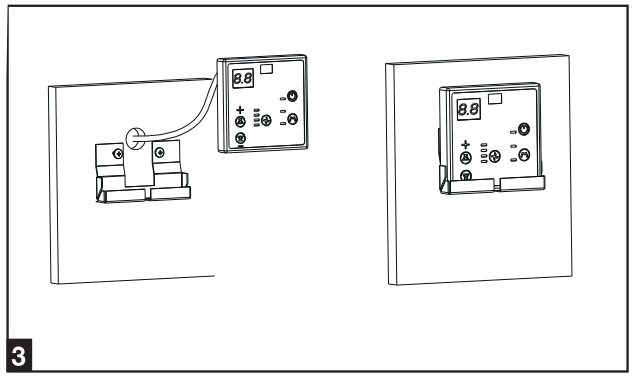

On the top of machine, there is a pocket for wall pad, remote control with battery and support, and extension cable.
To fix wall pad on the wall, you need to make a diameter 20mm hole for cable to pass through.(refer to drawing2). Using 2 wooden screws to fix support to the wall, connect extension cable to wall pad then put wall pad into tis support.

2.5. Compartment opening and electrical hook-up

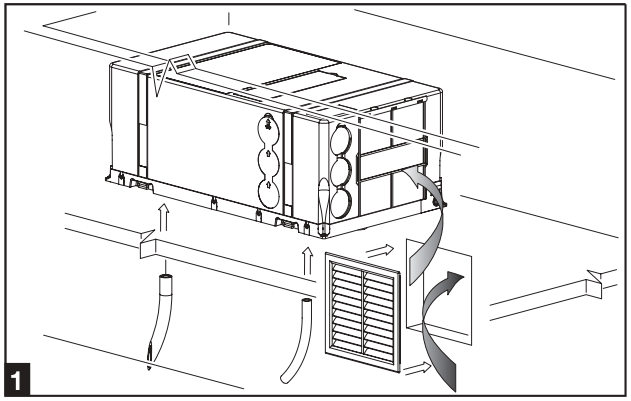

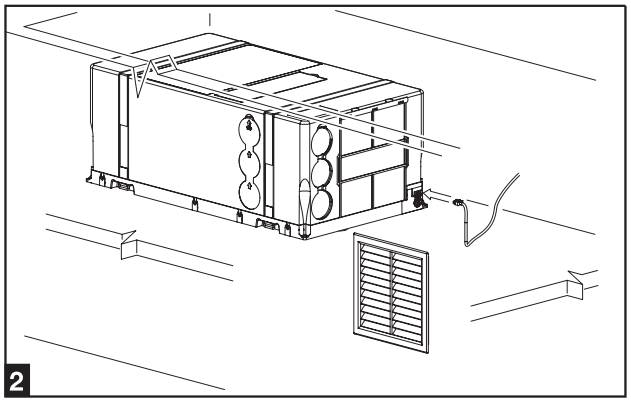

Make a hole in the compartment where the machine has been installed to permit recirculation of the internal air; Close this hole with a grille supplied that allows at least 300cm^2 of air to pass through. Install the condensation drain pipes provided, connect the receiver extension to the machine and lastly power up by inserting its plug into a socket outlet 220V - 50Hz.

Before switching on, make sure that the campsite column and the extension used are able to withstand the power input required by the machine(see technical data or dataplate)

2.6. Air ducting

Make the air ducting with trade parts that are not supplied. It is recommended to use cardboard pipe for air conditioning with an aluminium core and external covering of PVC with an inside nominal diameter of 60 mm. This pipe has an outside diameter of 64mm.
The ventilation pipes are joined by pressing them together thanks to the tapered hole on the air outlet.
The pipes can be connected either on the outlet on the coil side or, by removing the guard and closing the front holes, on the side outlet.

To achieve the best efficiency it is recommended to:
- lay the air pipes so they are as short and straight as possible;
- not use pipes any longer than 5m;
- not place the pipes near sources of heat.

The recirculation air is drawn in through a grille or through other openings with a total cross-section of at least 300cm^2.
The recirculation air opening must be made near the machine, if this is not the case then make sure that the air flow cannot be obstructed by anyting(if necessary, create an air duct between the opening and the machine).
The recirculation air must be taken from inside the passenger compartment; if it were taken from the outside then machine efficiency would suffer.

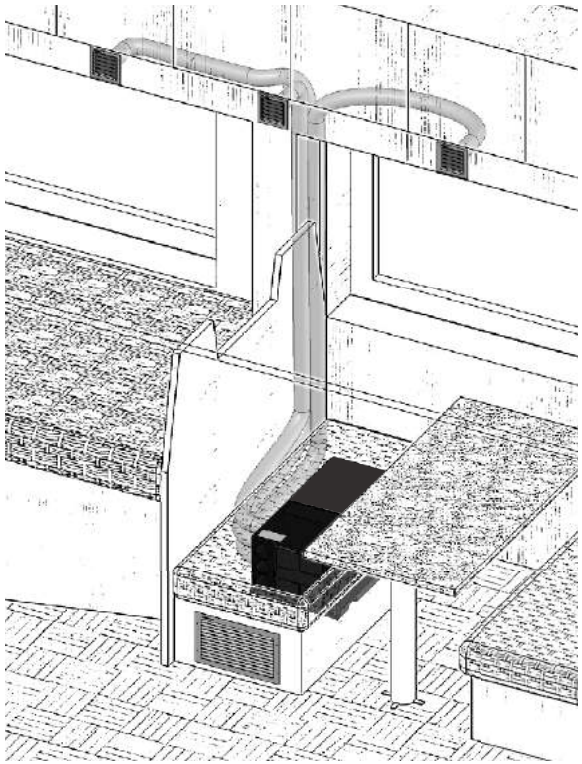

3.1.Trouble, causes, remedies

Operations the user can perform

Operations authorized personnel can perform

CAUSE / SOLUTION	the temperature is lower than 18°C	the temperature is higher than 30°C	check the Set Point temperature	Defective thermal protection	The Mode button is not in the right position	damaged electric heating element	low gas charge	damaged compressor	dirty heat exchange coils	defective internal fan	obstructed air filter	defective external fans	clogged condensation drain holes	damaged 4-way valve	no power arrives	voltage too low (less than 200 V)	defective electric condenser
the machine does not cool	○		○	●	○		●	●	●			●					
the machine does not heat		○	○	●	○	●	●	●	●					●			
air no longer circulates inside the vehicle									●	●	○						
water seeps into the vehicle													○				
the machine will not start				●				●							○	●	●
the machine stops working				●					●		○	●				●	●

3.2. Special maintenance

For better efficiency it is advisable to have your dealer/workshop perform special cleaning before using:

1. heat exchange coils;
2. condensation drain holes.

3.3. Decommissioning and recycling

For scrapping and recycling, observe the national law. Please contact your environmental authorities or authorized boards.

Wiring diagram

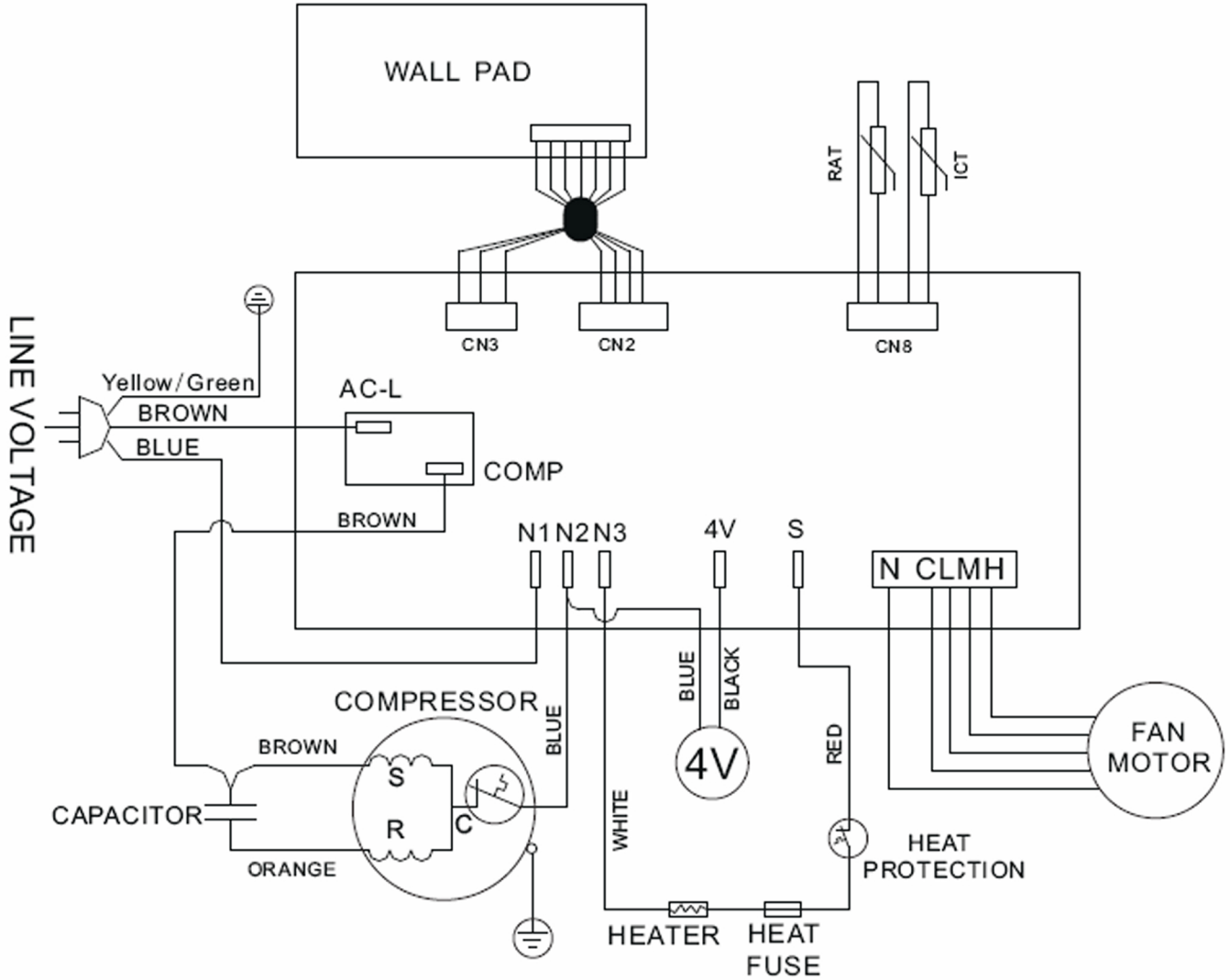

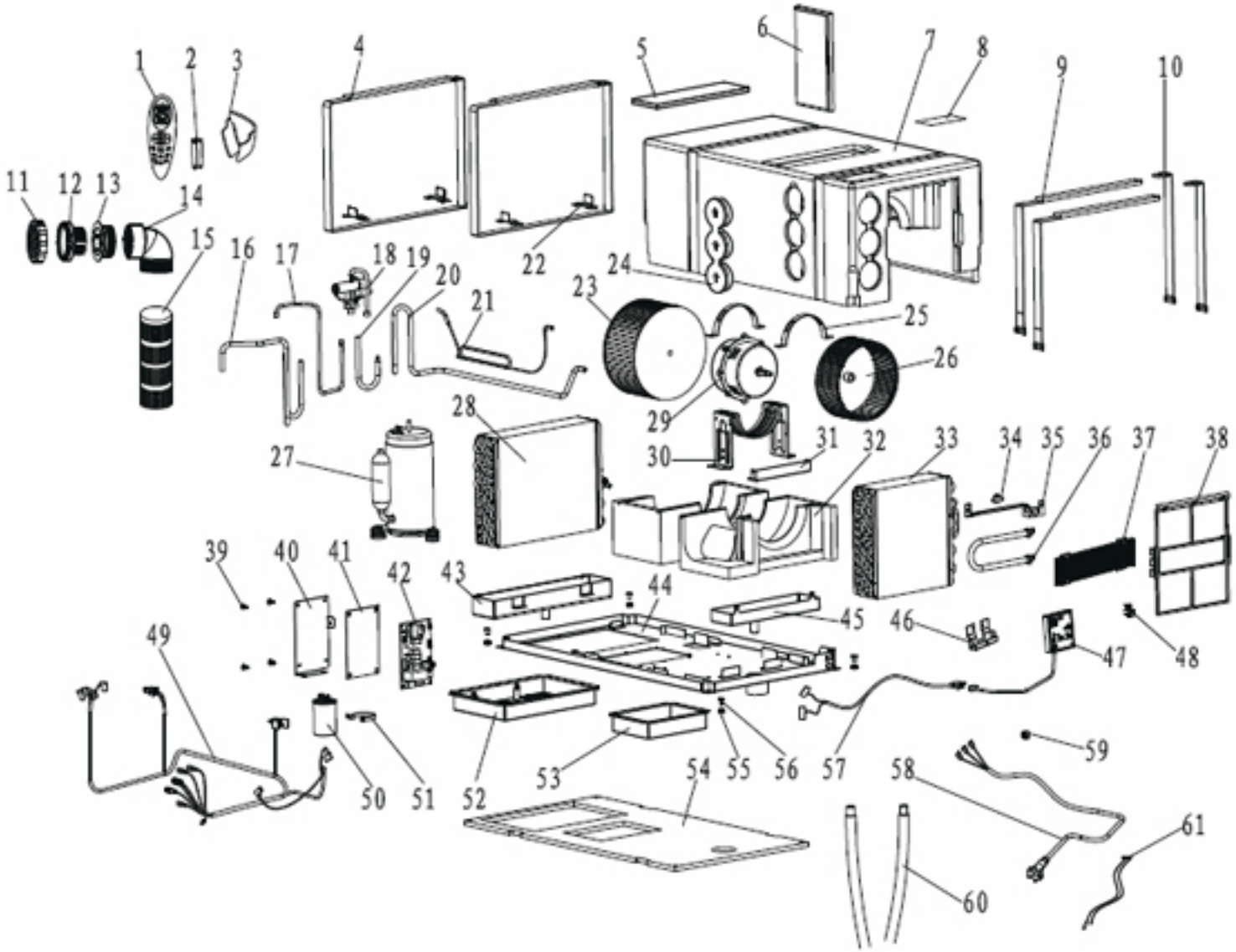
1
2
3
4
5
6
7
8
9
10
11
12
13
14
15
16
17
18
19
20
21
22
23
24
25
26
27
28
29
30
31
32
33
34
35
36
37
38
39
40
41
42
43
44
45
46
47
48
49
50
51
52
53
54
55
56
57
58
59
60
61

Spare parts catalogue table

No.	DESCRIPTION
1	REMOTE CONTROL
2	BATTERIES(SIZE AAA)
3	REMOTE CONTROL SUPPORT
4	FIXING BELT
5	ACCESSORIES DOOR
6	SIDE COVER
7	COVER
8	MACHINE DATAPLATE
9	BELT
10	BELT
11	GRILLE
12	GRILLE SUPPORT
13	BUSH
14	90° CURVE
15	AIR PIPE
16	SUCTION PIPE
17	DISCHARGE PIPE
18	4-WAY VALVE
19	HIGH PRESSURE PIPE
20	LOW PRESSURE PIPE
21	CAPILLARY ASSY
22	BUCKLE
23	CONDENSER FAN
24	AIR OUTLET PLUG

No.	DESCRIPTION
25	MOTOR FIXING STRIP
26	EVAPORATING FAN BLOWER
27	COMPRESSOR
28	CONDENSER
29	MOTOR
30	MOTOR SUPPORT
31	MOTOR REINFORCE
32	BASE EPP
33	EVAPORATOR ASSY
34	THERMOSTAT FOR HEATER
35	THERMOSTAT BRACKET FOR HEATER
36	HEATING STRIP
37	CARBON FILTER(OPTIONAL)
38	FILTER
39	SPACER FOR PCB
40	PCB FIXING BOARD
41	PCB BACKPLATE
42	PCB
43	DRAIN PAN FOR COND
44	BASE PAN
45	DRAIN PAN FOR EVAP
46	WALL PAD SEAT
47	WALL PAD CONTROLLER
48	SENSOR BRACKET

No.	DESCRIPTION
49	MAIN CORD
50	COMPRESSOR CAPACITOR
51	CAPACITOR FIXATION CLAMP
52	COMPRESSOR FIXNG BOARD
53	AIR OUTLET FIXING BOARD
54	BASEPAN FOAM
55	RUBBER BRACKET
56	PLASTIC BRACKET
57	WIRE HARNESS
58	POWER CORD
59	WIRING LOOP
60	DRAIN PIPE
61	Room temperature Sensor